A	RELEASED FOR TOOLING ECR / ECO # [illegible]	7/8/83	[illegible]	[illegible]	[illegible]
B	DELETED CR6 & C9. ADDED C11. [illegible] WAS CONNECTED TO R6. ECR/ECO# 1-20030	7-18-83	[illegible]	[illegible]	[illegible]
C	R6 WAS 10K. ECR/ECO# 20067	11-21-83	[illegible]	[illegible]	[illegible]
D	[illegible]	3-28-84	[illegible]	[illegible]	[illegible]

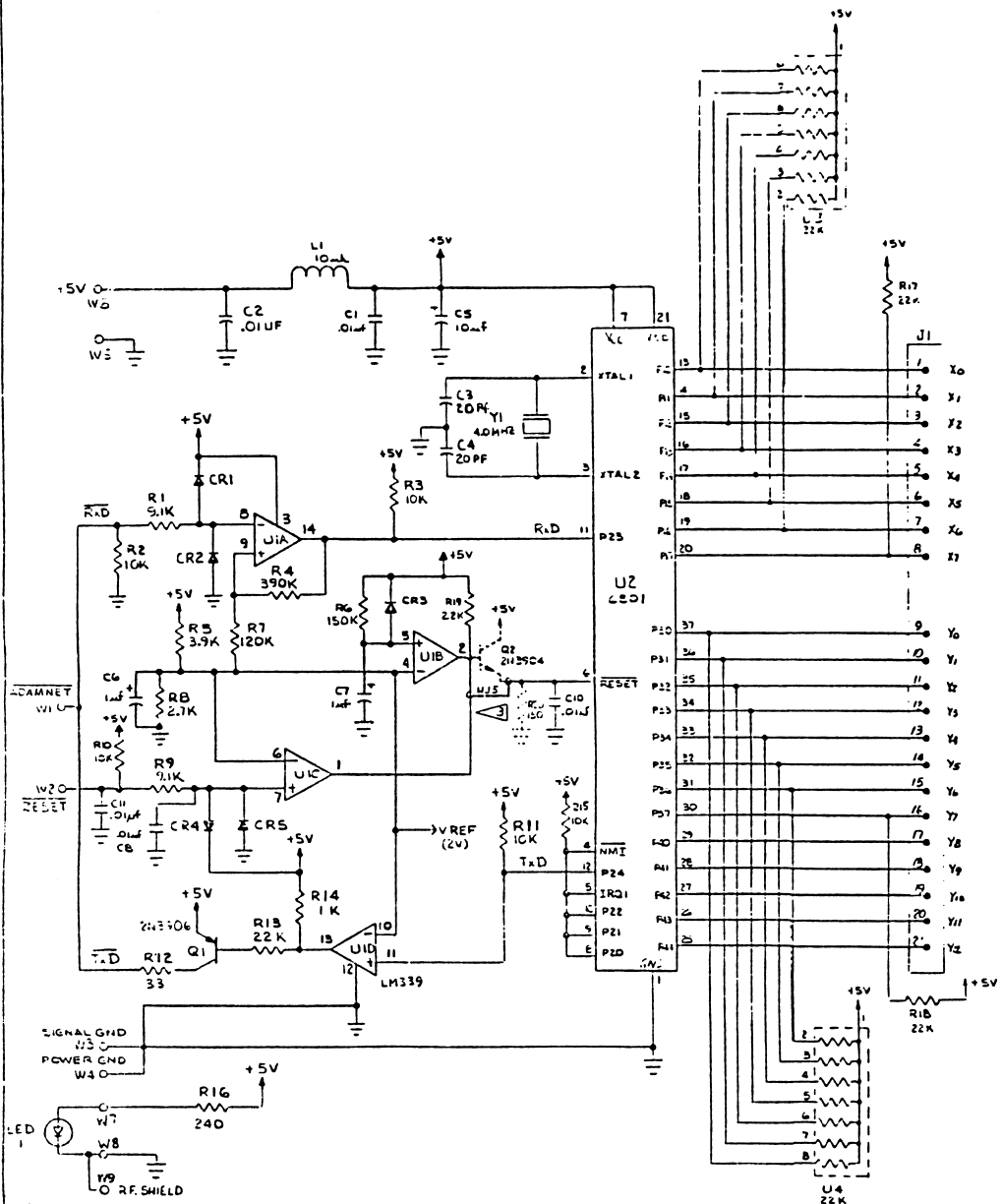

NOTES

UNLESS OTHERWISE SPECIFIED:
CAPACITORS ARE CERAMIC DISC
RESISTORS ARE CARBON FILM VALUES IN OHMS ± 5% ¼ WATT

FOR ASSEMBLY, SEE DRAWING 41034

FOR PRINTED WIRING BOARD, SEE DRAWING [illegible]

3 Q2 AND R20 ARE OPTIONAL, USED ONLY WHEN U2 IS A 68701 AND W45 IS NOT USED

CONFIDENTIAL

PRODUCTION RELEASE
For Manufacturing
Or Purchasing

Component Designations		
TYPE	LOCATION	DESIGNATION
[illegible]	[illegible]	
[illegible]	[illegible]	
DIODE	[illegible]	[illegible]
TRANSISTOR	[illegible]	
[illegible]	[illegible]	
SWITCH	[illegible]	
INTEGRATED CIRCUIT	U2	
[illegible]	[illegible]	
[illegible]	[illegible]	
[illegible]	[illegible]	
[illegible]	[illegible]	
[illegible]	[illegible]	
[illegible]	[illegible]	
[illegible]	[illegible]	
[illegible]	[illegible]	

FOR SCHEMATIC SEE DWG
FOR PRINTED WIRING BOARD SEE DRAWING

DO NOT SCALE DWG

P.M.

COLECO

KYBD. LOGIC P.C.B.

2414/2415

D